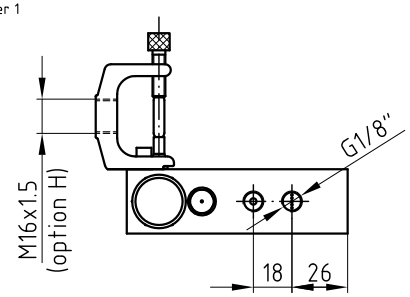

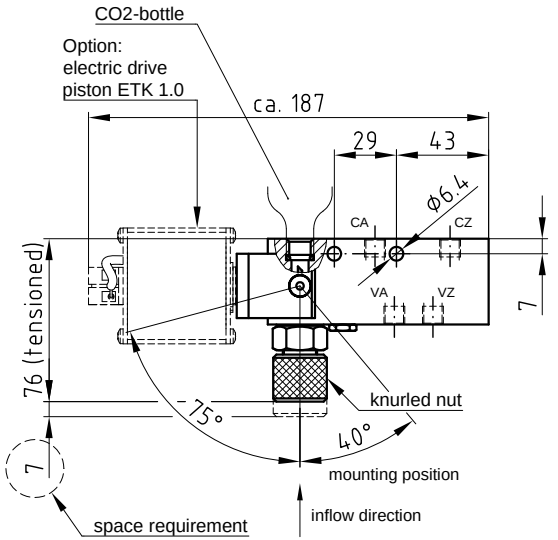

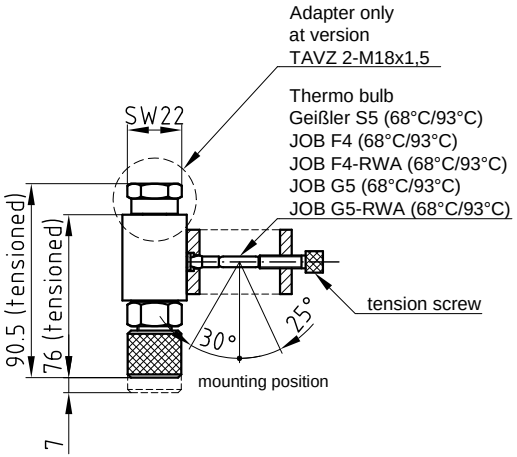

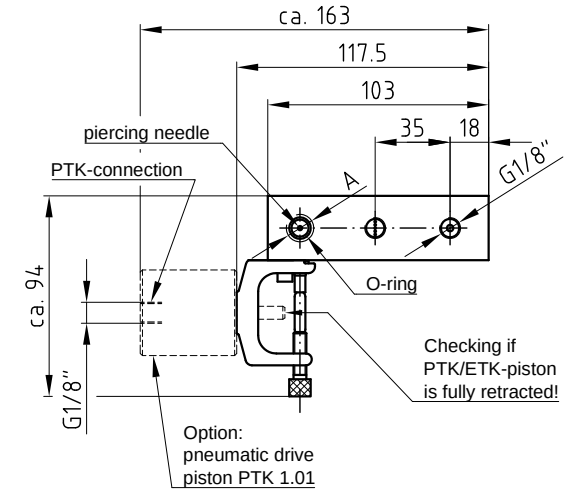

Description of function:

The temperature valve TAVZ is a releasing valve, which, on the bursting of a thermo bulb, taps a CO2-bottle, allows the CO2 to flow to outlet CA and vents the outlet CZ. The thermo bulb bursts at the specified rated temperature with a tolerance of -3°C / +8°C.
In the non-release position there is a connection between the inputs VA resp. VZ and the outlets CA resp. CZ e.g. to enable unhindered ventilation operation.

Releasing:

1) Thermal releasing via bursting of the thermo bulb
2) Option: Pneumatic releasing via pneumatic drive piston PTK 1.01 (must be specified with order)
3) Option: Electric releasing via electric drive piston ETK 1.0 (must be specified with order)

Mounting:

1) Join connections as follows:
   CA ..... cylinder OPEN VA .... vent line or CO2 line OPEN
   CZ ..... cylinder CLOSE VZ .... vent line or CO2 line CLOSE
   PTK ..... join PTK connection with external releasing device (option)
   ETK ..... join electric connection with external releasing device (option)
2) When using a CO2 one-way bottle the TAVZ must be installed as drawn adhering to the inflow direction (bottle screwed in from the top).
3) For our G1/8" connection threads we recommend to use screw connections with taper thread and to seal these in position using a liquid sealant (e.g. Loctite 243). It must be ensured that the liquid sealant is applied to the external thread.
4) We recommend using CO2 one-way bottles according to drawing No. 03.023.00.* and point out that the VdS-recognition is valid only with these bottles.

Commissioning:

1) Fully unscrew knurled nut.
2) If Option "Pneumatic/electric drive piston" is available, check if PTK/ETK tappet is fully retracted via spring resetting (PTK/ETK-connection must be pressureless/de-energized).
3) Insert thermo bulb so that the tip points in the direction of the tension screw.
4) Tighten knurled nut while at the end of the clamping travel (noticeable resistance) the knurled nut has to be turned in approximately 1/2 a turn in addition.
5) Fully tighten knurled nut.
6) Check if the piercing needle is positioned behind the piercing surface of the bottle screw-in thread.
7) Lightly grease the O-ring in the bottle screw-in thread.
8) Check if the reset button is in the correct position.
9) Screw in CO2-bottle
10) After releasing, repeat process

Caution:

- After thermo valve release, it is absolutely necessary, to unscrew the knurled nut first and CO2 bottle after.
- Check the compatibility of the thermo bulb and CO2 bottle.
- Dirt is built up by common use of the thermo valve. Therefore it must be cleaned free of deposits (dirt, fragments, etc.) in the thermo bulb holder and in the bottle thread.

Technical data:

max. static housing pressure	80 bar
max. dynamic operating pressure	80 bar
nominal width of valve	2 mm
nominal width of piercing needle	2 mm
ambient temperature range	-20°C - +110°C
releasing pressure PTK (Option)	10 bar
VdS approval no.	G 597018

Scope of supply:

Screw connections, themo bulb and CO2-bottle are NOT included in the scope of supply.

Types:

Type	Bottle srew-in thread A	Identical number
TAVZ 2	1/2" UNF (standard)	402000001030
TAVZ 2-M	M18x1.5 (adapter)	402000011030
TAVZ 2-F	W21.8x1/14"	402000021030
Option		
TAVZ 2-PTK	1/2" UNF (standard)	40200000K030
TAVZ 2-M-PTK	M18x1.5 (adapter)	40200001K030
TAVZ 2-F-PTK	W21.8x1/14"	40200002K030

Diagram without PTK 1.01:

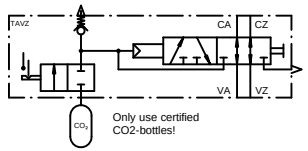

Diagram with PTK 1.01:

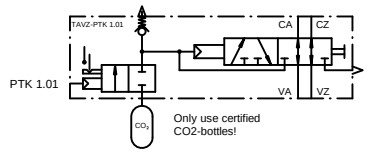

GRASL Pneumatic-Mechanik GmbH A-3454 Reidling Europastraße 1				Freimaßtoleranz nach DIN 7168:		Maßstab: 1:1 / Werkstoff: / ID - Nr.:
					Datum	Name
				Bear.	10.12.2008	Göschl
				Gepr.	24.08.2017	HA
				Norm		
03	Text, ETK	04.07.2017	SA	Type: TAVZ 2		Bezeichnung: **Data sheet** Thermal release valve (double pipe) TAVZ 2
02	Version Französisch	06.06.2011	SA			Zeichnung Nr.: 04.015.DAT.02.03-E / Blatt / BL.
01	Diverse Änderungen	16.02.2010	SA			
Zus.	Änderung	Datum	Name	(Urspr.)		(Ers.f.:) 04.015.DAT.02.02 (Ers.d.:)

erstellt am
28.5.2002 ER

formell geprüft am
29.5.2002 KW

fachlich geprüft am
29.5.2002 KW

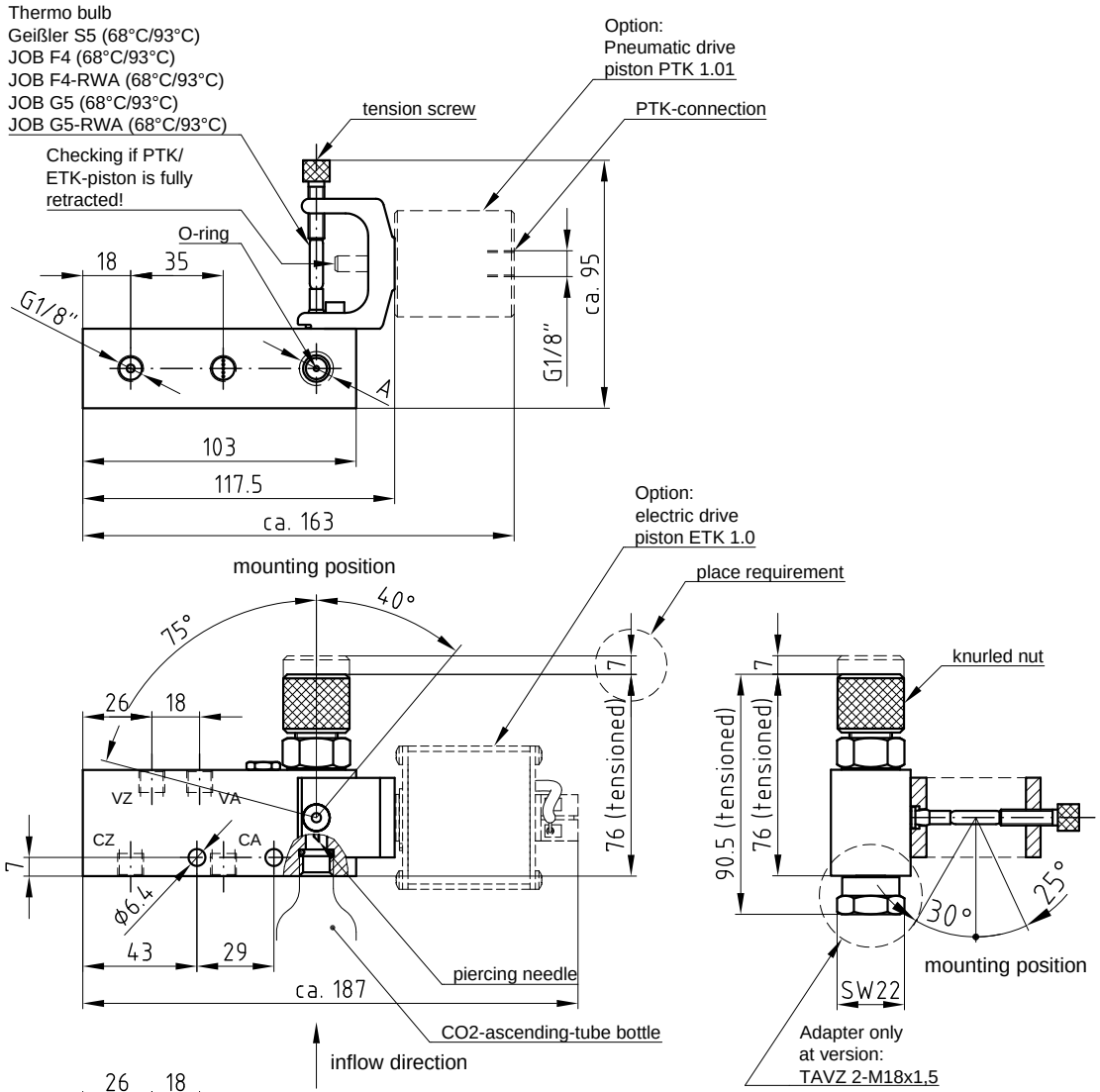

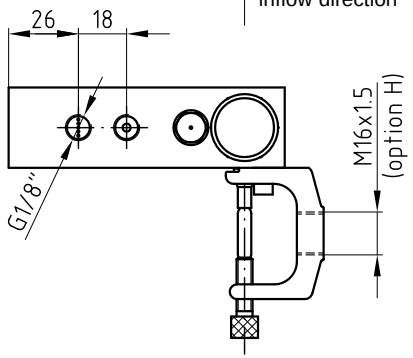

Description of function:

The temperature valve TAVZ is a releasing valve, which, on the bursting of a thermo bulb, taps a CO2-bottle, allows the CO2 to flow to outlet CA and vents the outlet CZ. The thermo bulb bursts at the specified rated temperature with a tolerance of -3°C / +8°C.
In the non-release position there is a connection between the inputs VA resp. VZ and the outlets CA resp. CZ e.g. to enable unhindered ventilation operation.

Releasing:

1) Thermal releasing via bursting of the thermo bulb
2) Option: Pneumatic releasing via pneumatic drive piston PTK 1.01 (must be specified with order)
3) Option: Electric releasing via electric drive piston ETK 1.0 (must be specified with order)

Mounting:

1) Join connections as follows:
   CA ..... cylinder OPEN
   CZ ..... cylinder CLOSE
   VA ..... vent line or CO2 line OPEN
   VZ ..... vent line or CO2 line CLOSE
   PTK ..... join PTK connection with external releasing device (option)
   ETK ..... join electric connection with external releasing device (option)
2) When using a CO2 ascending-tube bottle the TAVZ must be installed as drawn adhering to the inflow direction (bottle screwed in from the bottom).
3) For our G1/8" connection threads we recommend to use screw connections with taper thread and to seal these in position using a liquid sealant (e.g. Loctite 243). It must be ensured that the liquid sealant is applied to the external thread.

Commissioning:

1) Fully unscrew knurled nut.
2) If Option "Pneumatic/electric drive piston" is available, check if PTK /ETK tappet is fully retracted via spring resetting (PTK/ETK-connection must be pressureless/de-energized).
3) Insert thermo bulb so that the tip points in the direction of the tension screw.
4) Tighten knurled nut while at the end of the clamping travel (noticeable resistance) the knurled nut has to be turned in approximately 1/2 a turn in addition.
5) Fully tighten knurled nut.
6) Check if the piercing needle is positioned behind the piercing surface of the bottle screw-in thread.
7) Lightly grease the O-ring in the bottle screw-in thread.
8) Check if the reset button is in the correct position.
9) Screw in CO2-bottle
10) After releasing, repeat process

Caution:

- After thermo valve release, it is absolutely necessary, to unscrew the knurled nut first and CO2 bottle after.
- Check the compatibility of the thermo bulb and CO2 bottle.
- Dirt is built up by common use of the thermo valve. Therefore it must be cleaned free of deposits (dirt, fragments, etc.) in the thermo bulb holder and in the bottle thread.

Technical data:

max. static housing pressure	80 bar
max. dynamic operating pressure	80 bar
nominal width of valve	2 mm
nominal width of piercing needle	2 mm
ambient temperature range	-20°C - +110°C
releasing pressure PTK (Option)	10 bar
VdS approval no.	G 597018

Scope of supply:

Screw connections, thermo bulb and CO2-bottle are NOT included in the scope of supply.

Types:

Type	Bottle srew-in thread A	Identical number
TAVZ 2	1/2" UNF (standard)	400000001030
TAVZ 2-M	M18x1.5 (adapter)	400000011030
TAVZ 2-F	W21.8x1/14"	400000021030
Option		
TAVZ 2-PTK	1/2" UNF (standard)	40000000K030
TAVZ 2-M-PTK	M18x1.5 (adapter)	40000001K030
TAVZ 2-F-PTK	W21.8x1/14"	40000002K030

Diagram without PTK 1.01:

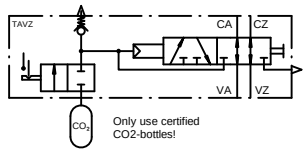

Diagram without PTK 1.01:

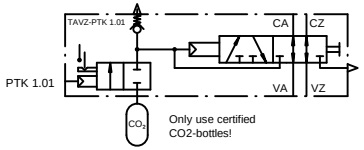

GRASL Pneumatic-Mechanik GmbH A-3454 Reidling Europastraße 1				Freimaßtoleranz nach DIN 7168:		Maßstab: 1:1	Werkstoff:
						ID - Nr.:	
					Datum	Name	Bezeichnung:
				Bear.	10.12.2008	Göschl	**Data sheet**
				Gepr.	24.08.2017	HA	Thermal release valve (douple pipe)
				Norm			TAVZ 2 with ascending-tube bottle
				Type:		Zeichnung Nr.:	Blatt
02	Text, ETK	04.07.2017	SA	TAVZ 2		04.015.DAT.03.02-E	
01	Diverse Änderungen	16.02.2010	SA				BL.
Zus.	Änderung	Datum	Name	(Urspr.)		(Ers.f.:) 04.015.DAT.03.01	(Ers.d.:)

erstellt am 28.5.2002 ER

formell geprüft am 29.5.2002 KW

fachlich geprüft am 29.5.2002 KW